NEMA LED EXIT
By
CHLORIDE
SYSTEMS

NSPL1R , NSPL1G
SINGLE FACE EMERGENCY NEMA LED EXIT INSTALLATION AND OPERATING INSTRUCTIONS

IMPORTANT SAFEGUARDS

When using electrical equipment, basic safety precautions should always be followed, including the following:

READ AND FOLLOW ALL SAFETY INSTRUCTIONS

All servicing should be performed by qualified personnel only.

Do not mount near gas or electric heaters.

Equipment should be mounted in locations and at heights where it will not readily be subjected to tampering by unauthorized personnel.

The use of accessory equipment not recommended by the manufacturer may cause an unsafe condition.

Do not let power supply cords touch hot surfaces.

Do not mount near open flames or sparks.

Do not use this equipment for other than intended use.

SAVE THESE INSTRUCTIONS

WARNING

Shut off AC power to branch circuits to which units will be connected. All wiring should be per National Electrical Code and local regulations.

INSTRUCTIONS - INSTALLATION

These units are designed for 120 or 277VAC,60 Hz operation and are suitable for wet/damp locations (Temperature Range: −30°C to +40°C).

1. Prior to mounting on the wall, determine the easiest routing for the AC service entry.
2. Remove cover, exit lens, lens brackets and p.c. board assy. (Fig. 2)
3. Disconnect bottom edge connector (3 circuit) from p.c. board assy. and AC service connector (4 circuit) from mating connector. Carefully set p.c. board assy. aside.
4. Determine location for AC service entry and ensure no internal components will be damaged when enclosure is drilled.

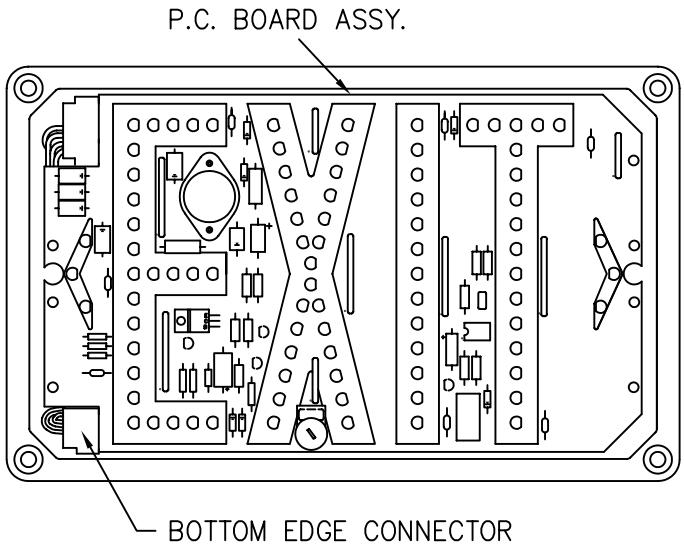

FIGURE 1

5. Drill hole in enclosure to accomodate AC service entry.
6. Mount housing to wall using (4) thru mounting holes or optional mounting feet. (Fig. 3 on page 2)
7. Install AC service conduit.

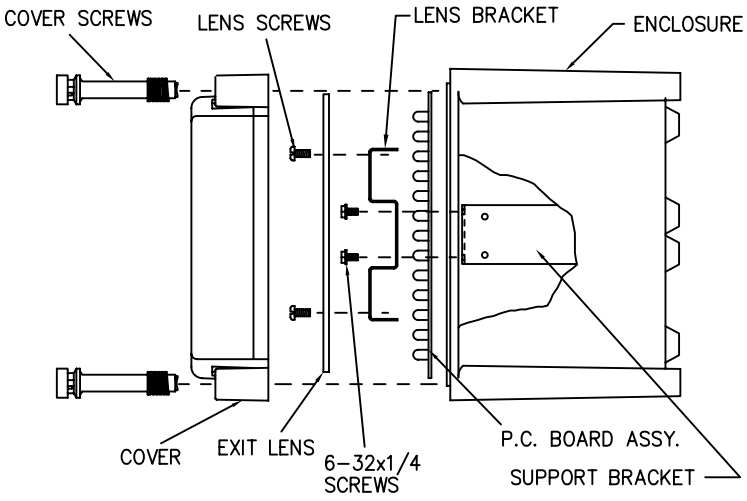

FIGURE 2

9140050468
REV 5

NSPL SINGLE FACE EMERGENCY NEMA LED EXIT

8. Hookup AC service to the connector assembly as follows.

120 VAC OPERATION	277 VAC OPERATION
Black Wire –120V Line	Blue Wire –277V Line
White Wire –Common	White Wire –Common
Green Wire –Ground	Green Wire –Ground

Unused primary wire must be insulated to prevent shorting.

Note: Connect supply ground to both green wires from unit chassis and unit AC service connector.

9. If Fire Alarm Flasher is used:
   –Connect RED wire to 24VDC POSITIVE
   –Connect YELLOW wire to 24VDC NEGATIVE.
   Use wire nuts for connection, (not supplied).

10. Reconnect bottom edge connector to p.c. board assy. Plug AC service and battery connectors into mating connectors. (Leds may light at this time).

11. Carefully reassemble p.c. board assy., lens brackets and exit lens in place.

12. Chevrons labels with self–adhesive backing are supplied. Apply label(s) to exit lens as necessary. (Fig. 3)

13. Reassemble cover in place and remove protective blue film.

INSTRUCTIONS - OPERATION

1. Energize AC power to unit. LED panel and charge indicator should illuminate.

2. Press test switch – indicator light should extinguish and LED panel should remain illuminated.

3. Leave AC connected for a minimum of 24 hours before performing any abbreviated testing. Full recharge of battery may take up to one (1) week.

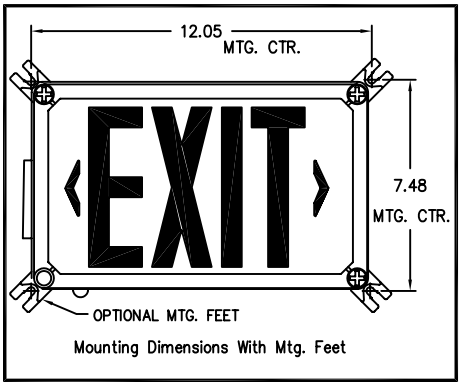

Mounting Dimensions With Mtg. Feet

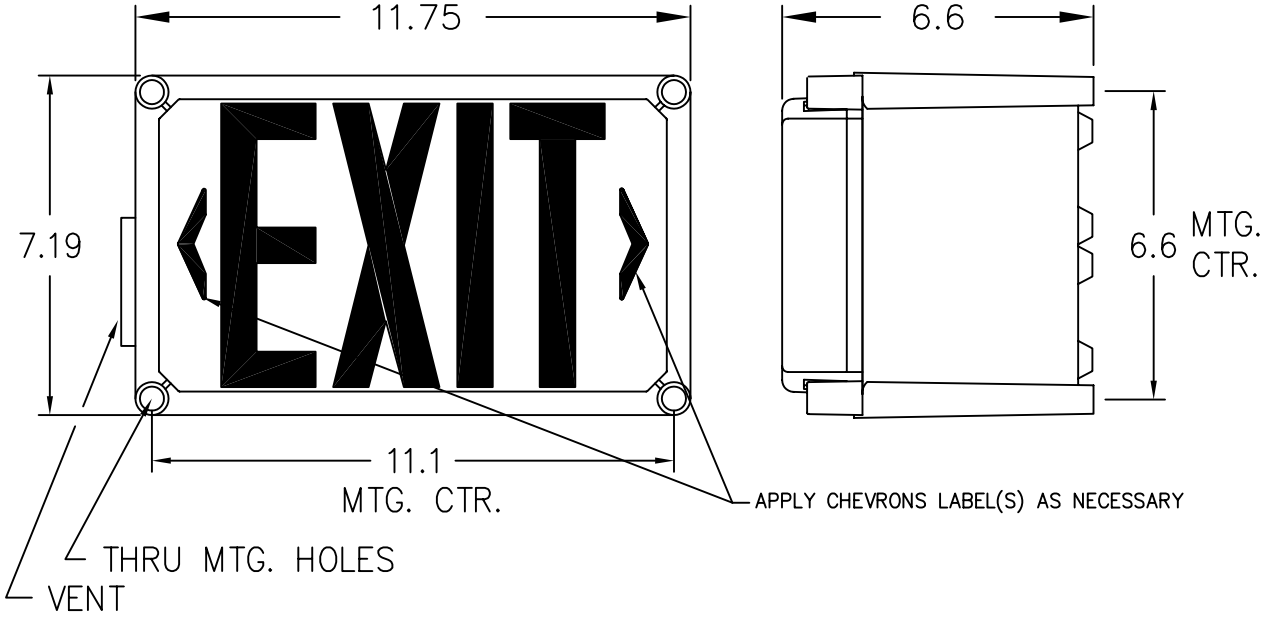

Mounting Dimensions Without Mtg. Feet

FIGURE 3